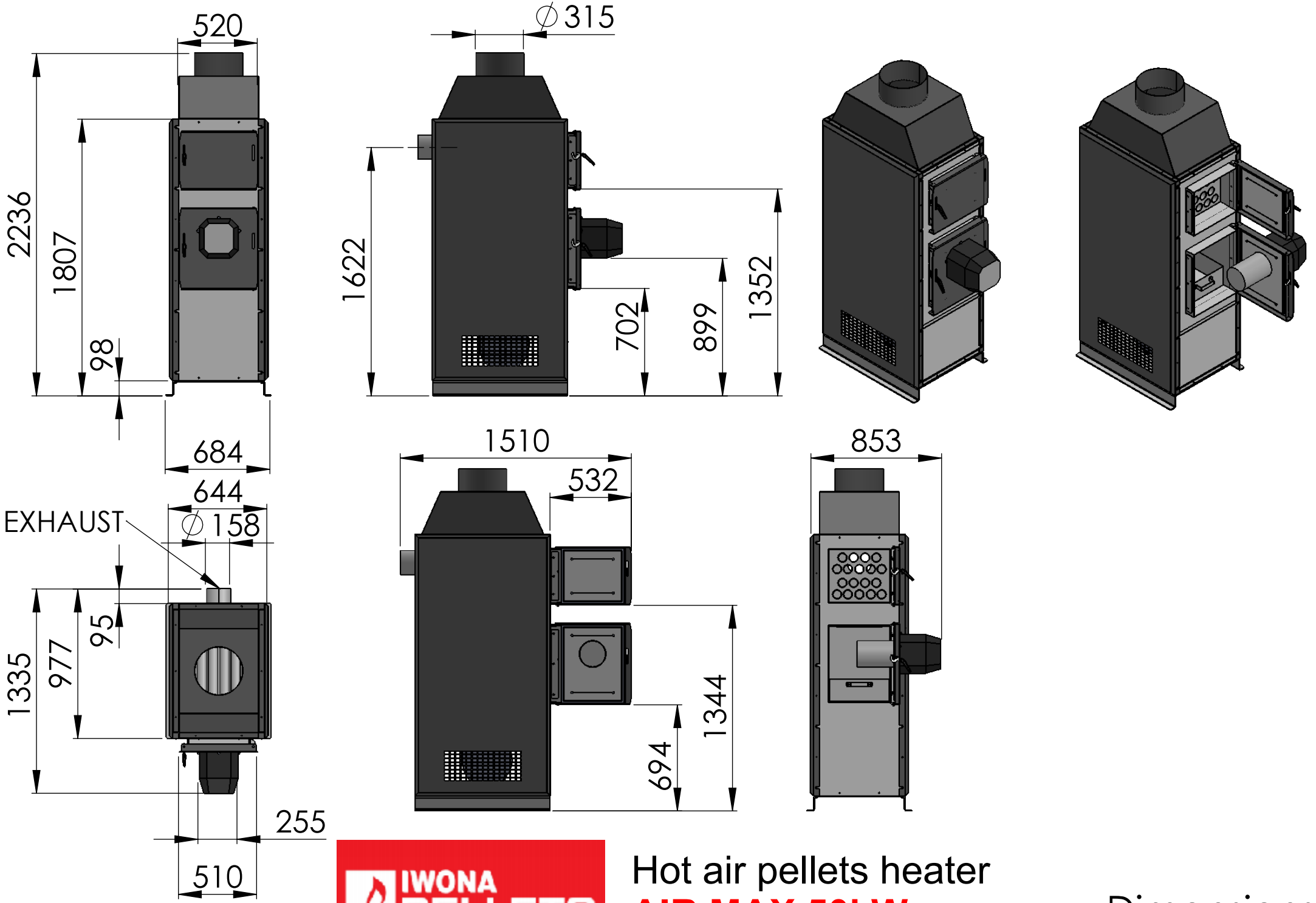

IWONA PELLETS
www.iwonapellets.com

Hot air pellets heater
AIR MAX 50kW

Dimensions